ZHEJIANG BENYI NEW ENERGY CO.,LTD.

CHANGJIANG RD, WENZHOU DAQIAO INDUSTRY PARK, BEIBAIXIANG TOWN, YUEQING, WENZHOU CITY, ZHEJIANG PROVINCE, CHINA

TEL: +86-577-5717 7008 FAX: +86-577-5717 7007

info@beny.com

www.beny.com

This catalogue has been printed on ecological paper .

Zhejiang Benyi New Energy Co., Ltd. All rights reserved.

If the models and specifications in this product catalogue change due to product updates, we will not provide prior notification.

VERSION: 20240113-01

ENERGY STORAGE

115kWh

AIR COOLING ENERGY STORAGE SYSTEM SPECIFICATIONS

Product Introduction

The 115kWh air cooling energy storage system cabinet adopts an "All-In-One" design concept, with ultra-high integration that combines energy storage batteries, BMS (Battery Management System), PCS (Power Conversion System), fire protection, air conditioning, energy management, and more into a single unit, making it adaptable to various scenarios. This product features a prefabricated cabin design for flexible deployment, convenient transportation, and no need for internal wiring and debugging. It responds quickly, boasts high reliability, and offers functions such as peak shaving, power capacity expansion, emergency backup power, grid balancing, capacity management, and multi-level parallel connection.

Application Scenario

It is suitable for industrial and commercial situations with high requirements for grid continuity, and can cover communication energy storage, grid frequency modulation energy storage, wind and solar microgrid energy storage, large-scale industrial and commercial distributed energy storage, data center energy storage, and photovoltaic power generation business in the new energy field. wait.

Product Features

Standard Design

Modular "All-In-One" integrated single cabinet design for ease of transportation, convenient shipping, and straightforward maintenance.

Intelligent and Efficient

Mature energy management strategies and equipment control, intelligent operation and maintenance, remote control to maximize the product's value.

High Safety

Multi-level fire protection system, graded isolation interlocking protection, and a circular air duct design to ensure the safe and stable operation of the product.

Flexible and Easy to Install

Supports multi-level parallel connection, bottom busbar design, maximizing land space utilization.

ENERGY STORAGE

Specifications and Model Description

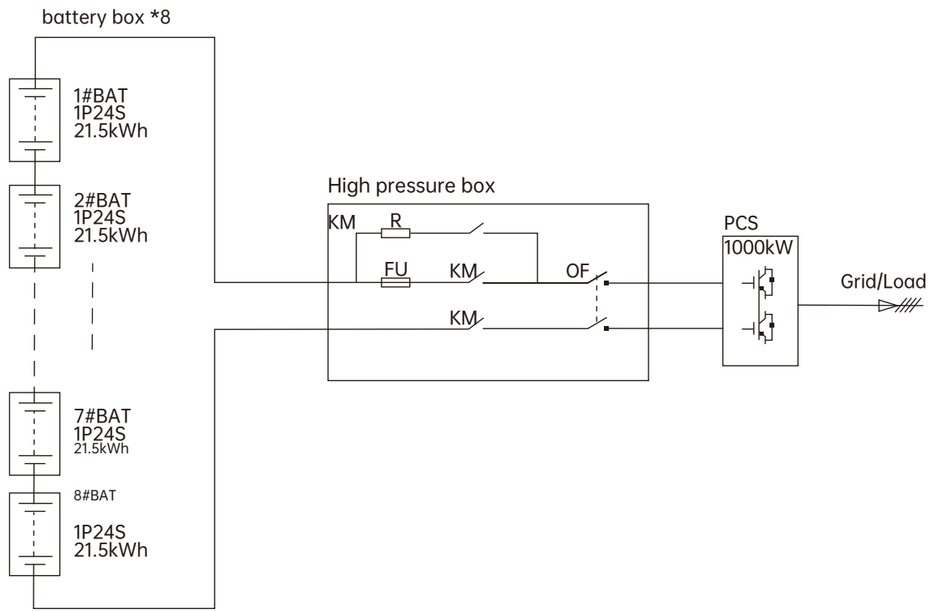

Product Introduction

BYHV-115SAC	
AC Parameters	
Rated Power	50kW
Rated Voltage	AC400C
Rated Current	75A
Rated Frequency	50Hz/60Hz
Power Factor	-1 ~ +1
Output Harmonics	< 3%
Connection Method	Three-phase four-wire
Isolation Method	Non-isolated
DC Parameters	
Battery Type	150Ah, LFP Battery
Battery Grouping Method	1P240S (1P40S*6)
Battery Rated Capacity	115kWh
Battery Rated Voltage	768V
Battery Voltage Range	672V to 876V
Rated Charge/Discharge Current	75A
Cycle Life	≥6000 cycles (at 25°C, 0.5C, 80% Depth of Discharge)
System Parameters	
System Energy Efficiency	≥90%
Operating Modes	Grid-Tied / Off-Grid
Communication Method	CAN, 485, TCP/IP
Protection Level	IP55
Anti-Corrosion Level	C3
Noise	≤65dB
Fire Protection	Aerosol
Operating Temperature	-20°C to +55°C
Operating Humidity	0% to 95% (no condensation)
Altitude	≤2000m (derating above 2000m)
Cooling Method	Intelligent Air Cooling
Overall Dimensions (WDH)	1000mm*1400mm*1900mm
Weight	Approximately 1.3 tons

ENERGY STORAGE

Installation Requirements

1. The installation environment should be dry, well-ventilated, free from corrosive substances, free from electromagnetic interference, and with a temperature between -20°C and 50°C.
2. The equipment should be placed on a stable surface and should maintain a certain distance from surrounding objects for heat dissipation.
3. The equipment should have reliable grounding and comply with relevant safety standards.
4. Follow the steps in the product manual or installation manual for installation and wiring.

Maintenance And Care

1. Regularly inspect the operating status of the equipment and perform necessary maintenance, including checking the tightness of terminal connections, the condition of cable equipment connections, and insulation performance.The equipment should be placed on a stable surface and should maintain a certain distance from surrounding objects for heat dissipation.
2. The battery components should be replaced regularly to ensure the normal operation of the equipment.
3. Periodically clean and maintain exhaust vents, such as air conditioning, ensuring cleaning fluids do not enter the equipment.

After-sale Service

1. We provide comprehensive after-sales service, including equipment installation, commissioning, and maintenance.The battery components should be replaced regularly to ensure the normal operation of the equipment.
2. During the equipment warranty period, we will provide free repairs or replacements. After the warranty period, we offer paid repair and maintenance services.
3. After equipment installation, we provide free safety inspections and safety training.

Precautions

1. Before installing the equipment, place it in a dry and well-ventilated environment, avoiding prolonged exposure to humid conditions.
2. Do not place flammable or explosive materials on the equipment.
3. Prohibit illegal operations and modifications on the equipment. If parameter changes are required, please contact the manufacturer or dealer.